SWING-UP CONTROL

Topics Covered

- Energy control.
- Nonlinear control.
- Control switching logic.

Prerequisites

- Filtering laboratory experiment.
- laboratory experiment.
- One of the balance control labs:
  - Balance Control
  - Pole-Placement Control
  - Optimal LQR Control

1 Background

In this lab, a nonlinear control system is developed to swing the pendulum from the downward, hanging down, position to the upright vertical position. In order to do this, an energy-based control will be developed that will calculate the acceleration (i.e motor volage) necessary to swing the pendulum up in the inverted position. Once it reaches the upright vertical position, a balance control will be engaged to stabilize the pendulum, similarly as witnessed in the balance control labs: Balance Control, Pole-Placement Control, or Optimal LQR Control.

1.1 Energy Control

In theory, if the arm angle is kept constant and the pendulum is given an initial perturbation, the pendulum will keep on swinging with constant amplitude. The idea of energy control is based on the preservation of energy in ideal systems: The sum of kinetic and potential energy is constant. However, friction will be damping the oscillation in practice and the overall system energy will not be constant. It is possible to capture the loss of energy with respect to the pivot acceleration, which in turn can be used to find a controller to swing up the pendulum.

The nonlinear equation of motion of a single pendulum based on the diagram in Figure 1.1 is

$$J_p\ddot{\alpha}(t) + m_p g l \sin\alpha(t) + m_p l u(t) \cos\alpha(t) = 0 \tag{1.1}$$

where $\alpha(t)$ is the angle of the pendulum defined as positive when rotated counter-clockwise, J_p is the moment of inertia with respect to the pivot point, $m_p$is the mass of the pendulum link, l is the distance between the pivot and the center of mass, and $u(t)$ is the *linear acceleration of the pendulum pivot* (positive along the x_0 axis).

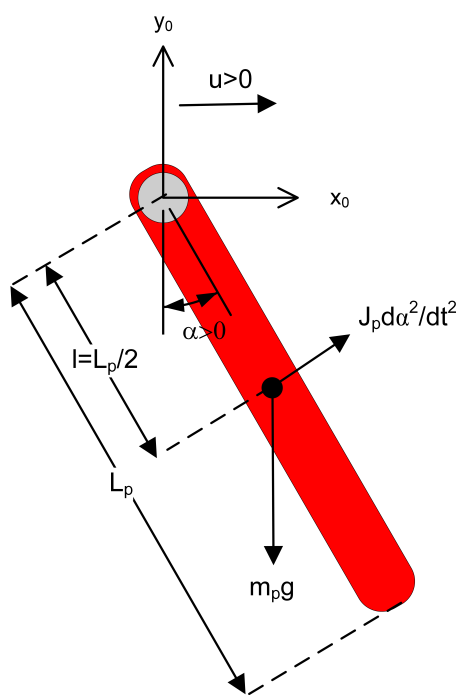

Figure 1.1: Free-body diagram of pendulum

The potential energy of the pendulum is

$$E_p(t) = m_p g l\,(1 - \cos\alpha)$$

and the kinetic energy is

$$E_k = \frac{1}{2} J_p \dot{\alpha}^2.$$

Note that the moment of inertia used to define the pendulum kinetic energy is with respect to its center of mass.

The potential energy is zero when the pendulum is at rest at $\alpha = 0$ and equals $E_p = 2m_p gl$ when the pendulum is upright at $\alpha = \pm\pi$. The sum of the potential and kinetic energy of the pendulum is

$$E = \frac{1}{2}J_p\dot{\alpha}^2 + m_p gl\,(1 - \cos\alpha)\,. \tag{1.2}$$

Differentiating Equation 1.2 yields

$$\dot{E} = \frac{dE}{dt} = J_p\ddot{\alpha}\dot{\alpha} + m_p gl\sin\alpha\dot{\alpha}. \tag{1.3}$$

Solving for $J_p\ddot{\alpha}$ in Equation 1.1

$$J_p\ddot{\alpha} = -m_p gl\sin\alpha - m_p ul\cos\alpha$$

and substituting this into Equation 1.3 gives

$$\dot{E} = -m_p ul\dot{\alpha}\cos\alpha.$$

Since the acceleration of the pivot is proportional to current driving the arm motor and thus also proportional to the motor voltage, it is possible to control the energy of the pendulum with the proportional control law

$$u = (E - E_r)\dot{\alpha}\cos\alpha. \tag{1.4}$$

This control law will drive the energy of the pendulum towards the reference energy, i.e. $E(t) \to E_r$. By setting the reference energy to the pendulum potential energy, $E_r = E_p$, the control law will swing the link to its upright position. Notice that the *control law is nonlinear* because it includes nonlinear terms (e.g. $\cos\alpha$). Further, the control changes sign when $\dot{\alpha}$ changes sign and when the angle is ± 90 degrees.

For the system energy to change quickly, the magnitude of the control signal must be large. As a result the following swing-up controller is implemented in the controller as

$$u = \text{sat}_{u_{max}}\left(k_e(E - E_r)\text{sign}(\dot{\alpha}\cos\alpha)\right) \tag{1.5}$$

where k_e is a tunable control gain and the $\text{sat}_{u_{max}}$ function saturates the control signal at the maximum acceleration of the pendulum pivot, u_{max}. The expression $\text{sign}(\dot{\alpha}\cos\alpha)$ is used to enable faster control switching.

The control law in Equation 1.5 finds the linear acceleration needed to swing-up the pendulum. Because the control variable in the QUBE-Servo 2 is motor voltage, $v_m(t)$, the acceleration needs to be converted into voltage. This can be done using the expression

$$v_m(t) = \frac{R_m r m_r}{k_t}u(t)$$

where R_m is the motor resistance, k_t is the current-torque constant of the motor, r is the length of the rotary arm, and m_r is the mass of the rotary arm. The block diagram of the swing-up nonlinear control is shown in Figure 1.2.

1.2 Hybrid Swing-Up Control

The energy swing-up control defined in Equation 1.5 can be combined with a balancing control, such as the ones described in Balance Control, Pole-Placement Control, or Pole-Placement Control laboratory experiments, to obtain a control system that swings up the pendulum and then balances it.

Similarly as described in the Balance Control laboratory experiment, the balance control is to be enabled when the pendulum is within ± 20 degrees. When it is not enabled, the swing-up control is engaged. Thus the switching can be described mathematically by

$$u = \begin{cases} u_{bal} & \text{if } |\alpha| - \pi \leq 0.345 \text{ rad} \\ u_{swing_up} & \text{otherwise} \end{cases} \tag{1.6}$$

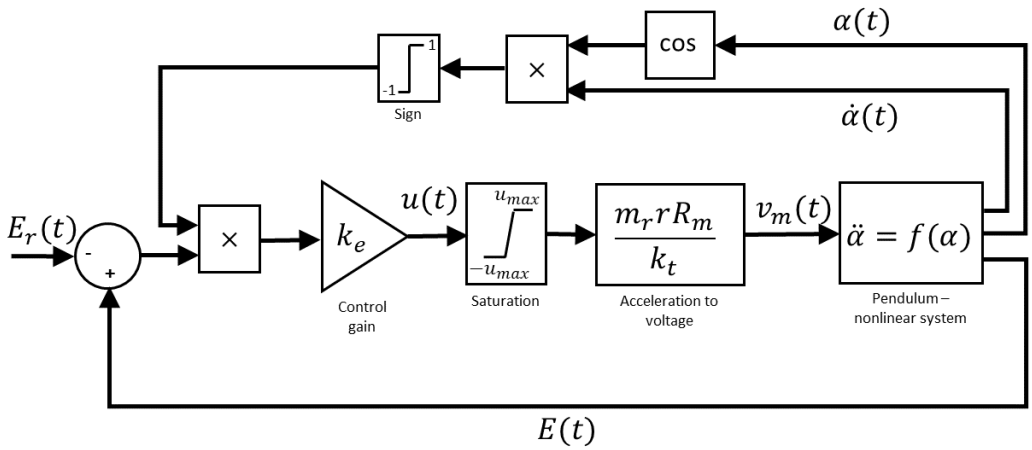

Figure 1.2: Energy swing-up control of pendulum

2 In-Lab Exercises

The controller in QUARC® is shown in Figure 2.1 that swings-up and balances the pendulum on the QUBE-Servo 2 rotary pendulum system. The *Swing-Up Control* subsystem implements the energy control described in Section 1.

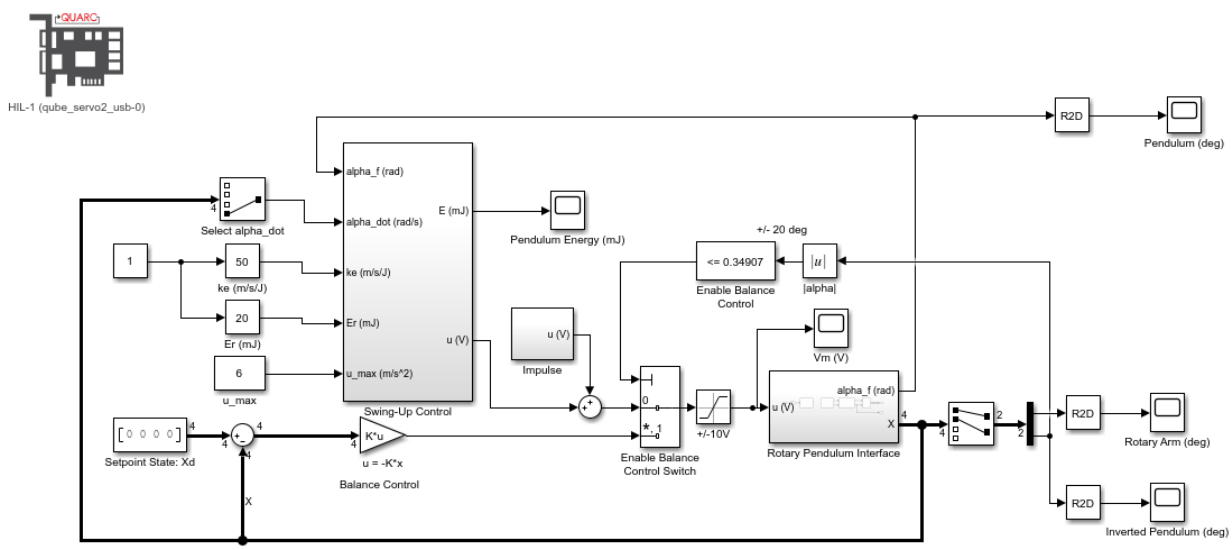

Figure 2.1: SIMULINK® model used with QUARC® to run swing-up controller

2.1 Energy Control

1. Open the `q_qube2_swingup.mdl` SIMULINK® model.
2. Run the `setup_swingup_student.m` MATLAB script. This loads the pendulum parameters that is used by the Simulink model.
3. To turn the swing-up control off, set the Slider Gain block called *ke* to 0.
4. Build and run the QUARC® controller.
5. Manually rotate the pendulum at different levels and examine the pendulum angle and energy in the *Pendulum (deg* and *Pendulum Energy (mJ)* scopes.
6. What do you notice about the energy when the pendulum is moved at different positions? Record the energy when the pendulum is being balanced (i.e. fully inverted in the upright vertical position). Does this reading make sense in terms of the equations developed in Section 1?
7. Click on the Stop button to bring the pendulum down to the initial, downward position.
8. Set the swing-up control parameters (i.e. the Constant and Gain blocks connected to the inputs of the Swing-Up Control subsystem) to the following:
   - ke = 50 m/s/J
   - Er = 10.0 mJ
   - u_max = 6 m/s^2
9. If the rotary arm does not start rotating back and forth, gently perturb the pendulum with your finger to get it going.

10. Vary the reference energy, *Er*, between 10.0 mJ and 20.0 mJ. As it is changed, examine the pendulum angle and energy response in *Pendulum (deg)* and the *Pendulum Energy (mJ)* scopes and the control signal in the *Vm (V)* scope. Attach the responses showing how changing the reference energy affects the system.

11. Fix *Er* to 20.0 mJ and vary the swing-up control gain *ke* between 20 and 60 m/s^2/J. Describe how this changes the performance of the energy control.

12. Stop the QUARC® controller.

2.2 Hybrid Swing-Up Control

1. Open the `q_qube2_swing_up.mdl` SIMULINK® model.

2. Run the `setup_swingup_student.m` MATLAB script. This loads the pendulum parameters that is used by the Simulink model.

3. Set the swing-up control parameters to the following:

   - ke = 20 m/s/J
   - u_max = 6 m/s^2

4. Based on your observations in the previous lab, Section 2.1, what should the reference energy be set to?

5. Make sure the pendulum is hanging down motionless and the encoder cable is not interfering with the pendulum.

6. Build and run the QUARC® controller.

7. The pendulum should begin going back and forth. If not, manually perturb the pendulum with your hand. **Click on the Stop button in the SIMULINK® tool bar if the pendulum goes unstable.**

8. Gradually increase the swing-up gain, k_e, denoted as the *ke* Slider Gain block, until the pendulum swings up to the vertical position. Capture a response of the swing-up and record the swing-up gain that was required. Show the pendulum angle, pendulum energy, and motor voltage.

9. Stop the QUARC® controller.

© 2021 Quanser Inc., All rights reserved.

Quanser Inc.
119 Spy Court
Markham, Ontario
L3R 5H6
Canada
info@quanser.com
Phone: 1-905-940-3575
Fax: 1-905-940-3576

Printed in Markham, Ontario.

For more information on the solutions Quanser Inc. offers, please visit the web site at:
http://www.quanser.com

This document and the software described in it are provided subject to a license agreement. Neither the software nor this document may be used or copied except as specified under the terms of that license agreement. Quanser Inc. grants the following rights: a) The right to reproduce the work, to incorporate the work into one or more collections, and to reproduce the work as incorporated in the collections, b) to create and reproduce adaptations provided reasonable steps are taken to clearly identify the changes that were made to the original work, c) to distribute and publically perform the work including as incorporated in collections, and d) to distribute and publicly perform adaptations. The above rights may be exercised in all media and formats whether now known or hereafter devised. These rights are granted subject to and limited by the following restrictions: a) You may not exercise any of the rights granted to You in above in any manner that is primarily intended for or directed toward commercial advantage or private monetary compensation, and b) You must keep intact all copyright notices for the Work and provide the name Quanser Inc. for attribution. These restrictions may not be waved without express prior written permission of Quanser Inc.